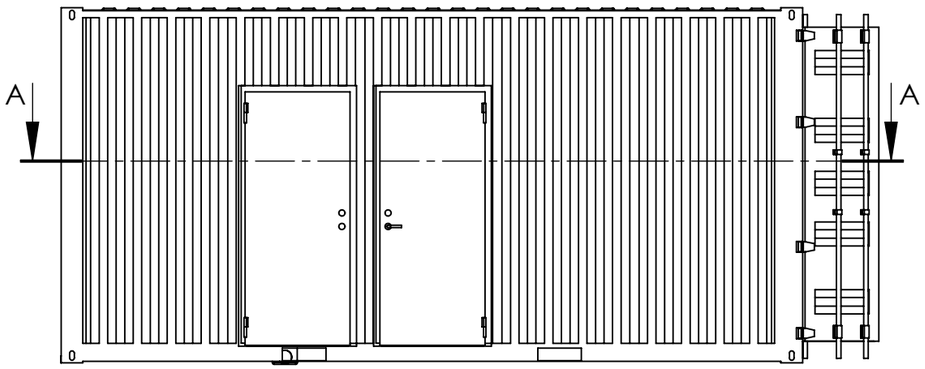

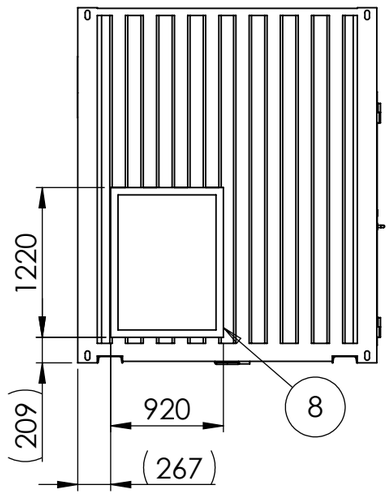

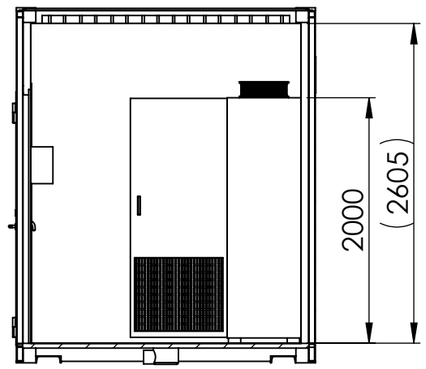

SECTION B-B

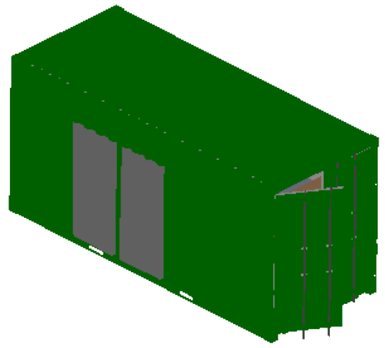

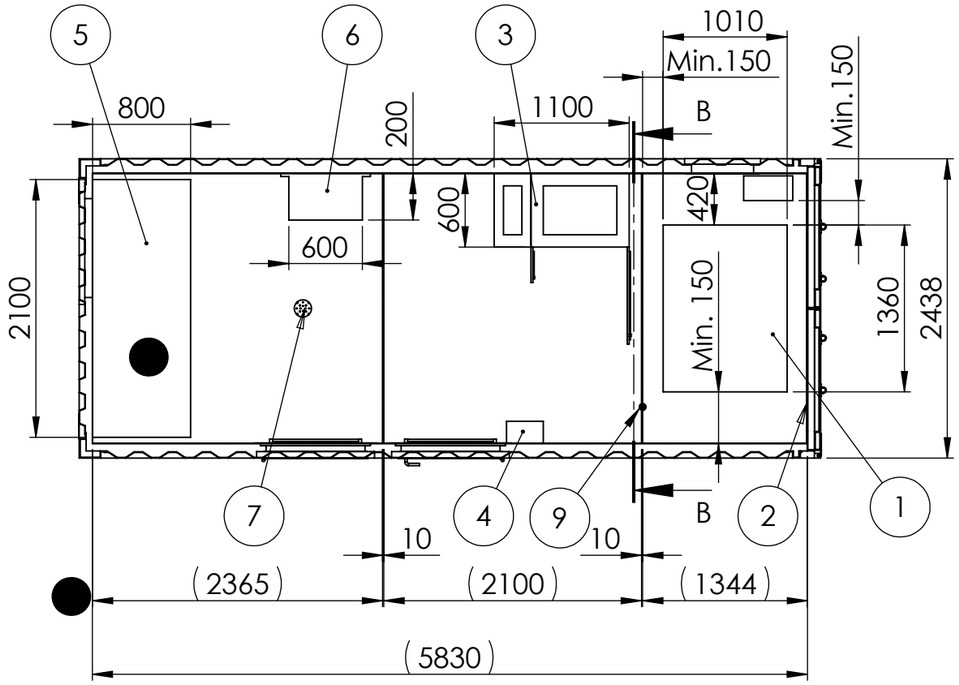

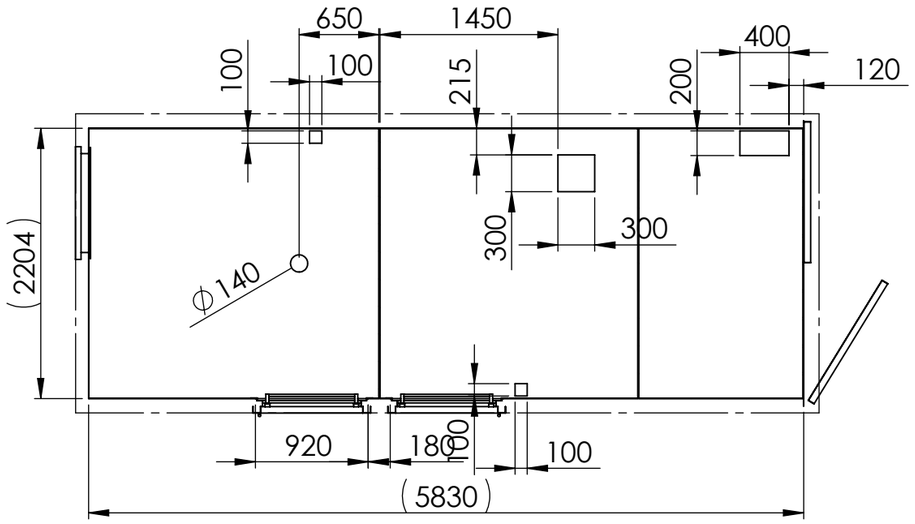

SECTION A-A
FLOOR OPENINGS

1. Transformer
2. [redacted]
3. [redacted]
4. [redacted]
5. [redacted]
6. [redacted]
7. [redacted]
8. [redacted]
9. [redacted]

PRELIMINARY

Rev	Description	Approved By	Approved Date
0			

[redacted]

Project name	Based on	Sheet size.
		A3
	Revis	Sheet
		1/1